RESTORATION PLAN AND ENVIRONMENTAL ASSESSMENT FOR THE SEPTEMBER 27, 1996 *JULIE N* OIL SPILL

Prepared by:
Maine Department of Environmental Protection
Maine Department of Conservation
Maine Department of Inland Fisheries and Wildlife
Maine Department of Marine Resources
National Oceanic and Atmospheric Administration
U.S. Department of the Interior

FINAL
April 12, 2000

TABLE OF CONTENTS

INTRODUCTION ..... CHAPTER 1

1.1 Purpose and Need for Restoration 1-1
1.2 The Julie N Oil Spill: Summary of Incident 1-2
1.3 Authority and Legal Requirements 1-2
1.3.1 Overview of Legal Requirements 1-2
1.3.2 NEPA Compliance 1-4
1.3.3 Coordination with Responsible Party 1-4
1.3.4 Public Participation 1-5
1.3.5 Administrative Record 1-5
1.4 Trustee Preferred Restoration Alternatives 1-6
1.5 Plan of This Document 1-7

AFFECTED ENVIRONMENT ..... CHAPTER 2

2.1 Description of Resources 2-1

NATURAL RESOURCES AND PUBLIC USE IMPACTS ..... CHAPTER 3

3.1 Introduction 3-1
3.2 Marine Communities 3-1

3.2.1 Macroalgae 3-1
3.2.2 Blue Mussels 3-1
3.2.3 Softshell Clams 3-1
3.2.4 Vertical Wall Communities 3-2
3.2.5 Sediment 3-2

3.3 Wetlands/Birds 3-2

3.3.1 Wetlands 3-2
3.3.2 Birds 3-2

3.4 Public Uses 3-3

3.4.1 Ferry Boat Trips 3-3
3.4.2 Wayneflete School Trail Activities 3-3
3.4.3 Party/Charter Boat Recreational Fishing Trips 3-3
3.4.4 Recreational Boating Trips 3-3
3.4.5 Tour Boat Trips 3-4
3.4.6 Whale Watching Trips 3-4

3.5 Summary of *Julie N* Exposure/Injury Estimates 3-4

TABLE OF CONTENTS
(Continued)

RESTORATION ALTERNATIVES ..... CHAPTER 4

4.1 Introduction 4-1
4.2 No-Action Alternative 4-1
4.3 Restoration Alternatives for Marine Community Resources 4-2

4.3.1 Preferred Alternative: Portland Oil and Grease Removal Project 4-2
4.3.2 Non-Preferred Alternatives Discussion 4-3

4.4 Restoration Alternatives for Wetlands and Birds 4-3

4.4.1 Preferred Alternative: Wetland/Bird Habitat Restoration Projects 4-3
4.4.2 Non-Preferred Alternatives Discussion 4-5

4.5 Restoration Alternatives for Lost Public Uses 4-6

4.5.1 Preferred Alternative: Fore River Trail Project 4-6
4.5.2 Non-Preferred Alternatives Discussion 4-7

4.6 Essential Fish Habitat Consultation 4-8

4.7 Summary of Preferred Restoration Alternatives and Costs 4-9

APPENDIX A: Response to Comments

APPENDIX B: Finding of No Significant Impact

1.1 Purpose and Need For Restoration

This Final Restoration Plan and Environmental Assessment (Final RP/EA) has been prepared by state and federal natural resource Trustees[1] for the restoration of natural resources and public use services that were exposed and/or injured by the *Julie N* oil spill on September 27, 1996. This Final RP/EA was issued after consideration of all public comments submitted regarding the November 29, 1999 Draft RP/EA. The Trustees' responses to these comments are included in this document as Appendix A.

The purpose of restoration, as outlined in this Final RP/EA, is to make the public whole for injuries to natural resources and natural resource services resulting from the *Julie N* oil spill by returning the injured natural resources and natural resource services to their "baseline" condition (i.e. the condition that would have occurred but for the spill) and compensating for associated interim losses.

The regulations for conducting a sound natural resource damage assessment to achieve restoration are found at 15 C.F.R. Part 990 *et seq.* These regulations were promulgated pursuant to the Oil Pollution Act of 1990 (33 U.S.C. § 2701, *et seq.*) ("OPA") to determine the nature and extent of natural resource injuries, select appropriate restoration projects, and implement or oversee restoration. This document presents the Trustees' estimates of exposure and/or injury and service losses to natural resources (Chapter Three) caused by the *Julie N* spill and the Trustees' preferred restoration alternatives (Section 1.4 below and Chapter Four). Implementation of the preferred restoration projects will be conducted in accordance with a settlement that the Trustees have entered into with Amity Products Carriers, Inc., the Responsible Party under OPA for the *Julie N* spill.

This Final RP/EA is intended to inform members of the public concerning the Trustees' final determination with respect to the natural resource injuries caused by the *Julie N* spill. This Final RP/EA also serves as an Environmental Assessment under the National Environmental Policy Act (NEPA), 42 U.S.C.§ 4321 *et seq.*, and addresses the potential impact of the preferred restoration actions on the quality of the physical, biological, and cultural environment. As described in detail below, this plan includes projects in the vicinity of the Fore River, in Casco Bay, and in the Scarborough Marsh.

[1] Maine Department of Environmental Protection ("MDEP"); Maine Department of Conservation ("MDOC"); Maine Department of Inland Fisheries and Wildlife ("MDIF&W"); Maine Department of Marine Resources ("MDMR"); U.S. Department of Commerce/ National Oceanic and Atmospheric Association ("NOAA"); and the U.S. Department of the Interior ("DOI")/U.S. Fish and Wildlife Service ("USFWS")

1.2 The *Julie N* Oil Spill: Summary of Incident

At approximately 11:05 a.m. on September 27, 1996, the oil tanker *Julie N*, inbound with a cargo of 8.8 million gallons of #2 fuel oil, struck the south side of the Million Dollar Bridge spanning Portland Harbor between Portland and South Portland as it went through the draw span. Following the collision, the vessel proceeded one mile up the Fore River to the Rolling Mills Terminal where it was boomed off. In the collision with the bridge, the *Julie N* sustained a substantial hole to its port bow area. The forward bunker tank lost approximately 93,198 gallons of IFO 380 heavy fuel oil. The #1 port cargo tank lost approximately 86,436 gallons of #2 diesel, totaling 179,634 gallons of spilled oil. High winds and extremely high tides on September 28th and 29th caused an unspecified amount of oil to be released from the boomed area and to be carried into the upper Fore River and the Stroudwater marsh area, including Long Creek. The Portland side of the river was more heavily oiled than the South Portland side, which had areas that remained almost oil-free. Recovery efforts continued until clean up was declared complete on December 2, 1996; the final tally indicated that while 140,976 gallons of oil were recovered, approximately 38,658 gallons of oil were lost to the environment.

1.3 Authority and Legal Requirements

This Final RP/EA has been prepared jointly by the Maine Department of Environmental Protection ("MDEP"); Maine Department of Conservation ("MDOC"); Maine Department of Inland Fisheries and Wildlife ("MDIF&W"); Maine Department of Marine Resources ("MDMR"); U.S. Department of Commerce / National Oceanic and Atmospheric Association ("NOAA"); and the U.S. Department of the Interior ("DOI") (represented by the U.S. Fish and Wildlife Service ("USFWS") (collectively, "the Trustees"). Each of these agencies is a designated natural resource Trustee under Section 1006(b) of OPA, 42 U.S.C. § 2706(b), and the National Contingency Plan, 40 CFR Section 300.600, for natural resources injured by the *Julie N* oil spill. As a designated Trustee, each agency is authorized to act on behalf of the public to assess and recover natural resource damages, and to plan and implement actions to restore natural resources and resource services injured or lost as the result of a discharge of oil.

1.3.1 Overview of Legal Requirements

A natural resource damage assessment conducted pursuant to OPA and the regulations promulgated thereunder at 15 C.F.R. Part 990, consists of three phases: 1) Preassessment; 2) Restoration Planning; and 3) Restoration Implementation. OPA authorizes state and federal natural resource trustees to initiate a damage assessment when, among other requirements, natural resources may have been injured and/or natural resource services impaired as a result of the incident.

OPA regulations provide specific definitions for the following terms:

- "Injury" is "an observable or measurable adverse change in a natural resource or impairment of a natural resource service";

- "Natural resources" are "land, fish, wildlife, biota, air, ground water, drinking water supplies, and other such resources belonging to, managed by, held in trust by, appertaining to, or otherwise controlled by the United States, any state or local government or Indian tribe"; and

- "Natural resource services" are "functions performed by a natural resource for the benefit of another resource and/or the public".

During the Preassessment Phase, the Trustees determined that the provisions of OPA applied to this spill, that natural resources under their trusteeship were affected by the spill, that response actions would not eliminate injury to those resources, and that feasible restoration alternatives exist to address injuries to those natural resources. On the basis of those determinations, the Trustees began the Restoration Planning Phase. In this phase, the Trustees evaluated and quantified the nature and extent of injuries to natural resources and services, and determined the need for, type of, and scale of appropriate restoration actions. Using the information developed during the Restoration Planning Phase, the Trustees developed this Final RP/EA.

The first component of the Restoration Planning Phase was injury assessment. The Trustees formed three Technical Working Groups, or "TWGs", to evaluate injury to: (1) marine communities; (2) wetlands and birds; and (3) public uses. As provided at 15 C.F.R. § 990.14(c)(1), the Trustees invited the Responsible Party to participate in the injury assessment component of the natural resource damage assessment. Consequently, members of the TWGs included Trustee staff, as well as representatives of the Responsible Party. The Responsible Party was involved in the design, performance, and funding of studies completed through the TWGs. The TWGs produced studies that the Trustees considered in determining the nature and extent of injuries to natural resources. As required by the regulations at 15 C.F.R. § 990.14(c)(4), the Trustees retained final authority to make determinations regarding injury and restoration.

The second component of the Restoration Planning Phase was restoration selection. Considering the nature and extent of exposure and/or injuries to natural resources caused by the *Julie N* oil spill, the Trustees developed a plan for restoring the injured resources and services, which is set forth in this Final RP/EA. In it, the Trustees identify a reasonable range of restoration alternatives, evaluate those alternatives, and using the criteria at 15 C.F.R. § 990.54, select the preferred alternatives from among them.

In selecting their preferred restoration alternatives, the Trustees considered all of the criteria outlined in the regulations, including the cost of carrying out each alternative. The Trustees have selected the least expensive alternative when two or more alternatives are expected to provide the same restoration benefit required by these criteria. In addition, the Trustees also considered whether the cost of a preferred alternative was commensurate with the value of the exposed and/or injured resource and service. The OPA Damage Assessment regulations do not expressly require natural resource Trustees to make this determination. However, as NOAA recognized when the OPA regulations were promulgated (61 Fed.Reg.490), "the evaluation and

selection of restoration alternatives according to the factors provided in the rule will ensure that the preferred actions are commensurate with the value of the natural resource losses."

Consistent with the OPA regulations (15 C.F.R. § 990.54(a)(5)), the Trustees also considered the extent to which restoration alternatives provide benefits to more than one natural resource and/or service. As described in more detail in Chapter 4 of this Final RP/EA, the preferred restoration alternatives selected by the Trustees benefit multiple resources and/or resource services.

Natural resource trustees may settle claims for natural resource damages under OPA at any time during the damage assessment process, provided that the settlement is:1) adequate in the judgment of the trustees to satisfy the goals of OPA, and 2) fair, reasonable, and in the public interest, with particular consideration of the adequacy of the settlement to restore, replace, rehabilitate, or acquire the equivalent of the injured natural resources and services. Sums recovered in settlement of such claims, other than reimbursement of trustee costs, may only be expended in accordance with a restoration plan, which may be set forth in whole or in part in a consent decree or other settlement agreement, which is made available for public review.

1.3.2 NEPA Compliance

Any restoration of natural resources under OPA must comply with the National Environmental Policy Act ("NEPA") (40 C.F.R. § 1500, *et seq.*) and the Council on Environmental Quality ("CEQ") regulations implementing NEPA. In compliance with NEPA and the CEQ regulations, this Final RP/EA summarizes the current environmental setting, describes the purpose and need for action, identifies alternative actions, assesses their applicability and environmental consequences, and summarizes opportunities for public participation in the decision-making process. Attached hereto at Appendix B is a finding of No Significant Impact under NEPA.

1.3.3 Coordination with Responsible Party

The OPA regulations require the Trustees to invite the Responsible Party to participate in the damage assessment process. Although Responsible Parties may contribute to the process in many ways, final authority to make determinations regarding injury and restoration rests solely with the Trustees.

Accordingly, the Trustees delivered a formal invitation pursuant to the OPA regulations for participation in the damage assessment to Amity Products Carriers, Inc., the Responsible Party for the *Julie N* oil spill, on October 3, 1996. A Trustee-Responsible Party Cooperative Agreement was signed by the Responsible Party on July 15, 1997. This agreement called for a cooperative injury assessment. The designated technical representatives of the Responsible Party participated actively in the damage assessment following the spill; they were involved in the design, performance and funding of many studies completed as part of this assessment. They also participated actively in Technical Working Groups (TWGs), which were created to design

and interpret the studies and evaluate potential injuries. Coordination between the Trustees and the Responsible Party helped reduce duplication of studies, increase cost effectiveness of the assessment process, and increase sharing of information and experts . Input from the Responsible Party was sought and considered throughout the damage and restoration planning process.

1.3.4 Public Participation

The Draft RP/EA was made available to the public on January 7, 2000. Since publication of the Draft RP/EA, the Trustees have received comments from the public. A public meeting was held on February 10, 2000 in Portland, Maine. The Trustees' response to all comments is included as Appendix A to this document.

Public review of the Draft RP/EA is an integral component of the restoration planning process. Through the public review process, the Trustees sought public comments on the analyses used to define and quantify natural resource injuries and the methods proposed to restore injured natural resources or replace lost resource services. The Draft RP/EA provided the public with information about the nature and extent of the natural resource injuries and identified and evaluated restoration alternatives.

Public review of the Draft RP/EA was consistent with all state and federal laws and regulations that apply to the natural resource damage assessment process, including Section 1006 of OPA, 42 U.S.C.§2706 the regulations for Natural Resource Damage Assessment under OPA (15 CFR Part 990), NEPA (42 USC §4371, *et seq.*) and the regulations implementing NEPA (40 CFR 1500, *et seq.).*

1.3.5 Administrative Record

The Trustees have maintained records to document the information considered by the Trustees as they planned and implemented assessment activities. These records are compiled in an Administrative Record, which is available for public review at the address listed below. The Administrative Record facilitates public participation in the assessment process and will be available for use in future administrative or judicial review of Trustee actions to the extent provided by federal or state law.

An Administrative Record containing a copy of the public documents in this matter is available for inspection by the public during normal business hours at:

Maine Department of Environmental Protection
Southern Maine Regional Office
312 Canco Road
Portland, Maine
Contact: Mark Margerum, (207)287-7842

Arrangements should be made in advance to review the record at the Maine Department of Environmental Protection or to obtain copies of documents in the record by contacting Mark Margerum at (207)287-7842.

1.4 Trustee Preferred Restoration Alternatives

In response to the *Julie N* oil spill, the Trustees initiated natural resource damage assessment efforts pursuant to OPA and the Maine Oil Discharge and Pollution Prevention Act (38 MSRA § 541, *et seq.*, 1989 and sup. 1998). The Trustees and representatives for the Responsible Party cooperatively conducted and reviewed the results of 16 preassessment studies to make a preliminary determination whether natural resources or natural resource services were injured and/or threatened by ongoing injury due to the *Julie N* spill. Three technical working groups, consisting of representatives from the Trustees and the Responsible Party, were formed to address the following potential injury categories: marine communities, wetlands/birds, and lost public uses. These preassessment studies and the related work of the technical working groups are described in detail in the September 1998 *Julie N* Preassessment Data Report (PDR) and the November 29, 1999 Draft RP/EA. Both of these documents are located in the administrative record.

The Trustees have estimated the nature and extent of the natural resources exposed to and/or injured and the lost public uses resulting from the *Julie N* oil spill. The Trustees believe that further injury assessment would result in the confirmation of such injuries to natural resources and natural resource services. However, in order to move more quickly towards the goal of restoration, the Trustees have selected a set of restoration projects that they believe will adequately restore the injured natural resources and compensate the public for the lost uses resulting from the *Julie N* spill.

The Trustees selected the following projects after carefully considering a range of restoration alternatives. For marine communities, the Trustees have selected the "Portland Oil and Grease Removal Project" to reduce the discharge of oil and greases to the Fore River and thereby enhance the marine environment's overall quality. For wetlands/birds, the Trustees have selected projects which have as their goals the enhancement of approximately 130 acres of salt marsh habitat for bird species affected by the *Julie N* spill and the acquisition and protection of marine bird nesting habitat. For lost public uses, the Trustees have selected the construction of a one-mile segment of recreational trail along the Fore River.

The Responsible Party has agreed to pay $1,000,000 to the Trustees for the estimated costs of implementing these proposed projects, including the costs to the Trustees for oversight during the implementation of the projects. The title of the specific projects and the breakdown of the $1,000,000 are shown in Exhibit 1-1 below. The cost figures set forth below are estimates. The actual costs incurred for the projects and oversight may be somewhat higher or lower. Detailed descriptions of the restoration projects can be found in Chapter 4.

Exhibit 1-1 SUMMARY OF PREFERRED *Julie N* OIL SPILL RESTORATION PROJECTS AND COSTS		
Resource/Service	**Preferred Restoration Project**	**Total Cost to RP**
Marine Community	Portland Oil and Grease Removal Project	$350,000
Wetlands/Birds	Wetland/Bird Habitat Restoration Projects	$475,000
Lost Public Uses	Fore River Trail Project	$125,000
Total Estimated Cost of Restoration Projects		**$950,000**
Total Estimated Trustee Oversight Costs		**$ 50,000**
Total Restoration and Oversight Costs Payment by RP to Trustees		**$1,000,000**

1.5 Plan Of This Document

The remainder of this document presents further information about the natural resource injury studies and proposed restoration actions for the *Julie N* oil spill.

- Chapter 2 briefly summarizes the natural resources found in the Fore River.
- Chapter 3 provides a brief description of the nature and extent of the natural resources exposed and/or injured and the lost public uses resulting from the Julie N oil spill.
- Chapter 4 provides a discussion of restoration options to enhance recovery of the resources affected by the spill.

2.1 Description of Resources

The area most heavily affected by the *Julie N* oil spill was a portion of the Fore River extending from its outlet at the entrance to Portland Harbor upstream for a distance of approximately 3 miles (see Exhibit 2-1). This area also includes Long Creek, which flows into the Fore River upstream of the I-295 Bridge. The Fore River is located along the southern coast of Maine at the southwest end of Casco Bay and discharges into Casco Bay at the entrance of Portland Harbor. Portland Harbor functions as an estuary where the freshwater from the Fore River and sea water from Casco Bay mix.

Portland Harbor is a major port in New England, and is the largest commercial port in Maine. It is also used extensively by the public for recreational boating and fishing, and for ferry, tour and whale-watching trips. Casco Bay has been designated an estuary of national significance and is included in the U.S. Environmental Protection Agency's National Estuary Program. Its shoreline covers 578 miles, including 785 islands, islets, and exposed ledges. Casco Bay's water surface encompasses nearly 200 square miles, and it provides 229 square miles of marine habitat. Twelve significant lake and river systems feed the bay, including Sebago Lake and four major tributaries, including the Fore River.

Natural resources are abundant in the Fore River and its tributaries. A diverse array of intertidal vegetation, including *Spartina alterniflora* and *Spartina patens*, growing on soft, unconsolidated sediment substrate, and *Fucus* sp. and *Ascophyllum* sp., covering harder, rockier surfaces, is found in the Fore River. Similarly, "vertical wall communities", comprised of hydroids, stalked ascidians, barnacles, anemones and mussels, exist on vertical walls in the river such as granite, concrete, steel and wood pilings and crib work.

The varied marine habitats, including tidal mud flats and the sloped walls of the federal channel of the Fore River, support many benthic species including marine worms, green crabs, mussels, starfish, sponges, periwinkles, clams, and mussels. Lobster burrows line the walls of the federal channel, particularly near the mouth of the harbor.

Salt marsh habitat can be found in the area of the Fore River above Veteran's Memorial Bridge. The salt marsh provides important habitat for numerous sea bird, waterfowl, wading bird species, fin fish, shellfish, and crustaceans.

3.1 Introduction

The Trustees have estimated the nature and extent of the natural resources exposed to and/or injured by oil from the *Julie N* and the lost public uses resulting from *Julie N* oil spill. The affected resource/resource service categories considered by the Trustees include the following:

- marine communities;
- wetlands/birds; and
- public uses.

The Trustees' estimates are described on a resource-specific basis below and are summarized in Exhibit 3-1.

3.2 Marine Communities

3.2.1 Macroalgae

Macroalgae are marine plants that are important as primary producers and as structural components of intertidal and subtidal habitat. As a result of spill response efforts, oiled macroalgae was removed from shoreline areas in the Fore River. The total amount of macroalgae reported as having been removed is 1,143 square feet and 340 pounds wet weight. Additional macroalgae injury was accounted for by considering macroalgae as part of the vertical wall communities discussed below.

3.2.2 Blue Mussels

Polycyclic Aromatic Hydrocarbon ("PAH") concentrations in mussels collected from the Fore River were generally 10-30 times higher after the oil spill than concentrations found in Fore River mussels collected from the same areas in 1994. Total PAH concentrations in mussel tissue ranged from 27,000 to 290,000 ppb (dry weight). With the exception of two samples, one from Fore River Cove and one from Mill Cove, fingerprinting analyses of Fore River mussel samples indicated that the PAHs were consistent with *Julie N* oil.

3.2.3 Softshell Clams

Total PAH concentrations were up to eight times higher in softshell clams collected in oiled areas of the Fore River (e.g. Thompson Point) relative to softshell clams from Fore River

areas receiving little-to-no Julie N oil contamination (i.e. Fore River Cove). Total PAH concentrations in softshell clam tissue ranged from 14,000 to 110,000 ppb (dry weight). Fingerprinting analyses of all Fore River softshell clam samples indicated that the PAHs were consistent with Julie N oil.

3.2.4 Vertical Wall Communities

Vertical wall communities are comprised of plants and animals (hydroids, stalked ascidians, anemones, macroalgae and other marine organisms) which attach themselves to pilings and other hard, vertical surfaces. The Trustees' injury estimates for vertical wall communities represent the areal extent of such surfaces that were heavily oiled and cleaned by spraying the surfaces with hot water. The linear distance of such surfaces, estimated to be approximately 11,558 feet, was multiplied by the tidal range of 10 feet to provide an estimate of the areal extent of affected vertical wall communities, or approximately 115,580 square feet.

3.2.5 Sediment

Sediment can be a major repository for contaminants entering marine ecosystems. Sediment contamination has the potential to adversely affect resident biota associated with the sediment (*e.g.* infaunal organisms such as marine worms and clams) and higher organisms dependent upon those biota as a prey (*e.g.*, fish, birds). The Trustees observed oil in intertidal sediments in the vicinity of Thompson's Point and at depths ranging from 2 to 6 cm. Out of 25 sediment samples taken from selected intertidal areas throughout the area affected by the *Julie N* spill, only 4 of those analyzed contained PAHs attributable to *Julie N* oil. Total PAH concentrations for these 4 sediment samples ranged from 3,600 to 67,000 ppb (dry weight) and they were all collected in the vicinity of Thompson's Point, Long Creek and Airport Cove. It should be noted, however, that all of the sediment samples were collected after the October 20, 1996, northeaster storm, which may have resulted in the resuspension and redistribution of oil-contaminated sediments in the Fore River.

3.3 Wetlands / Birds

3.3.1 Wetlands

A detailed analysis of the wetlands oiled in the Fore River was conducted in 1996 and 1997 through a combined aerial survey and ground-truthing approach. Photographs and ground-truth data were used to map the aerial extent of wetland vegetation. Approximately 25.6 acres of intertidal emergent wetland in the Fore River were exposed to *Julie N* oil.

3.3.2 Birds

Between September 29 and November 19, 1996, 1,679 cumulative observations of oiled birds (80% seagulls; 9% double-crested cormorants; the remainder were black ducks, wading

birds, and shorebirds) were documented in the Fore River area. Since these were cumulative observations made during daily surveys, some oiled birds were probably counted more than once. Eighty-seven birds were counted as "heavily oiled", 508 as "moderately oiled" and 1,084 as "lightly oiled". Twenty-eight live oiled birds were processed through the rehabilitation center; 15 died, 12 were released, and one was held because of an injury limiting its flight capability. In addition, 12 birds were already dead when they were brought into the rehabilitation center.

3.4 Public Uses

Impacts to the public's use of spill-contaminated resources in the Fore River/Portland Harbor and western Casco Bay areas were varied, increasing with proximity to the spill site and heavily contaminated areas.

3.4.1 Ferry Boat Trips

To assess the losses incurred by the *Julie N* oil spill, the Trustees consulted with spokespersons at the two ferry lines servicing Portland Harbor: Casco Bay Lines and Prince of Fundy Cruises, Limited. While Casco Bay Line ferries were not impacted, service provided by the Prince of Fundy Cruises, Limited Ferry, the *Scotia Prince*, was seriously disrupted from September 27-29, resulting in 250 lost ferry boat passenger/person trips and 2,700 diminished use ferry boat passenger/person trips.

3.4.2 Wayneflete School Trail Activities

The oil impacted marshes adjacent to the Wayneflete School public trail system. Based on discussions with Wayneflete School regarding the recreational usage of the trails, the Trustees estimated the number of lost and diminished use trips at the Wayneflete School from the time of the spill through June 30,1997 at 1,380 lost person trips and 1,380 diminished use person trips.

3.4.3 Party/Charter Boat Recreational Fishing Trips

The spill occurred as marine sport fishing approached the end of its normal season. The Trustees consulted with captains of three vessels which charter recreational fishing trips to assess the losses incurred by the *Julie N* oil spill. Patronage of party/charter boat recreational fishing businesses was lighter than normal because of the spill. Based upon data collected, an estimated 124 party/charter boat recreational fishing person trips were lost in late September and October of 1996.

3.4.4 Recreational Boating Trips

Casco Bay recreational boating season generally ends in late September, with the season extending for another month in the Fore River/Portland Harbor area. Recreational boats docked at marinas located outside the spill response area were not affected by vessel traffic restrictions.

Marinas and mooring areas located within the spill area experienced closures, ranging from several days in duration on up to six weeks (in the case of Merrill's Marina). Adjusting for the uncertainties of weather, the Trustees have estimated that approximately 4,862 recreational boating person trips would have been taken had the spill not occurred.

3.4.5 Tour Boat Trips

The Trustees consulted with the owner of House Island Tours and Charters to assess the losses incurred by the *Julie N* oil spill. Educational tour boat trips to House Island for approximately 300 secondary school students were canceled due to the spill.

3.4.6 Whale Watching Trips

The Trustees consulted with the captain of the *Odyssey*, a whale watching boat, to assess the losses incurred by the *Julie N* oil spill. An estimated 225 whale watching person trips were lost during spill response/cleanup operations in late September and October.

3.5 Summary of *Julie N* Exposure/Injury Estimates

A summary of the Trustees' estimates of the nature and extent of the natural resources exposed to and/or injured by oil from the *Julie N* and the lost public uses resulting from *Julie N* oil spill is provided in Exhibit 3-1.

Exhibit 3-1

***JULIE N* OIL SPILL: SUMMARY OF EXPOSURE/INJURY ESTIMATES**

MARINE COMMUNITIES	
Injured Resource/Service	**Exposure**
Marine Vegetation	1,143 sq. ft and 340 lbs. of vegetation cut and removed
Blue Mussels	Total PAH concentrations ranged from 27,000 - 290,000 ppb (dry weight)
Softshell Clams	Total PAH concentrations ranged from 14,000 - 110,000 ppb (dry weight)
Vertical Wall Communities	115,580 sq. ft. of vertical wall exposed to either heavy oiling and/or hot washing
Sediment	Four of the 25 sediment samples analyzed contained PAHs attributable to *Julie N* oil. Total PAH concentrations for these four sediment samples ranged from 3,600 to 67,000 ppb (dry weight)

WETLANDS AND BIRDS	
Injured Resource/Service	**Exposure**
Wetlands	25.6 acres of wetlands lightly to heavily oiled
Birds	27 dead birds and 1,679 cumulative observations of birds with visible oiling

PUBLIC USE		
	Service Losses and Interruptions	
Lost Public Uses	**Lost Use**	**Diminished Use**
Ferry Boat Trips	250 lost ferry trips	2,700 diminished ferry trips
Wayneflete School Trail Activities	1,380 lost trail activities trips	1,380 diminished trail activities trips
Party/Charter Boat Recreational Boating Trips	124 party/charter boat trips lost	
Recreational Boating Trips	4,862 lost person-day boating trips	
Tour Boat Trips	300 lost tour boat trips	
Whale Watching Trips	225 lost whale watching trips	

4.1 Introduction

The Trustees evaluated a range of compensatory restoration alternatives which would enhance the natural recovery of resources exposed and/or injured by the *Julie N* oil spill, and would provide additional resource services to compensate the public for losses pending natural recovery. In the following sections the preferred and non-preferred restoration alternatives for the three categories of affected natural resources and natural resource services (marine communities, wetlands/birds and lost public uses) are presented and discussed.

In evaluating the possible restoration alternatives, the Trustees have considered, among other things, the following:

- The extent to which each alternative is expected to meet the Trustees' goals and objectives of returning the injured natural resources and services to baseline and/or compensating for interim losses;
- The likelihood of success of each alternative;
- The extent to which each alternative will prevent future injury as a result of the incident, and avoid collateral injury as a result of implementing the alternative;
- The extent to which each alternative benefits more than one natural resource and/or service;
- The effect of each alternative on public health and safety; and
- The cost to carry out the alternative.

Information supporting the Trustees' selection of restoration alternatives is provided throughout the remainder of this chapter.

4.2 No-Action Alternative

NEPA requires the Trustees to evaluate the "no-action" alternative. Here, the "no-action" alternative would mean that the Trustees would take no direct action to restore injured natural resources or to compensate for lost services pending environmental recovery, relying instead solely on natural recovery for the achievement of restoration goals. While the Trustees believe that natural recovery will occur over varying time scales for the resources exposed to and/or injured by the *Julie N* oil spill, the interim losses suffered would not be compensated for under a "no-action" alternative.

The Trustees' responsibility to seek compensation for interim losses is clearly set forth in OPA. Thus, while the Trustees consider natural recovery to be appropriate as a primary restoration option for all injuries resulting from the *Julie N* oil spill, they are seeking compensatory restoration for the interim losses as set forth in detail below.

4.3 Restoration Alternatives for Marine Community Resources

4.3.1 Preferred Alternative: Portland Oil and Grease Removal Project

Project Description

The Portland Oil and Grease Removal Project includes capital purchases and improvements to assist the City of Portland in implementing an aggressive effort to reduce the discharge of oil and grease to the Fore River and other receiving waters. The project consists of the purchase of a new vacuum truck and the rehabilitation of an existing vacuum truck to enable the City to collect sediments contaminated with oil and grease from storm systems throughout the City. The project also includes the purchase of an articulating boom for an existing City truck that will enable the City to clean contaminated sediments from a greater portion of the sidewalk, street and median strip areas throughout the City. Absent the collection efforts that the City has committed to undertake with this equipment, the oil and grease contaminated sediments would be discharged into the Fore River and Portland Harbor. Contaminated sediments collected by the City will be disposed of at authorized solid waste management facilities.

Restoration Objectives

This project is intended to provide compensatory restoration for the marine resources that were exposed to and/or injured by *Julie N* oil by reducing the amounts of oil and grease discharged into the Fore River and Portland Harbor from the City of Portland.

Environmental and Socio-Economic Impacts

No adverse environmental or economic impacts are expected from this project.

Cost

The Trustees propose to implement this project with funds from the settlement with the Responsible Party. The estimated costs to fund this project are $350,000. The City of Portland will assume responsibility for operation and maintenance of the capital improvements purchased with settlement monies, and for the evaluation of the success of the project.

Evaluation

By reducing the storm water discharge of oil and grease contaminated sediments to the Fore River and Portland Harbor, this project would enhance the overall quality of the marine

environment. In addition, the mobile equipment acquired for this project, such as the vacuum truck, would be used throughout the City of Portland. The substantial commitment by the City of Portland to aggressively use the new equipment throughout the City and to evaluate the success of the project also significantly enhances the value of this project. For these reasons, the Trustees believe that the Portland Oil and Grease Removal Project would adequately compensate for the marine community injuries and interim losses resulting from the *Julie N* spill, and have selected it as the preferred restoration alternative for marine community resources.

4.3.2 Non-Preferred Alternatives Discussion

The Trustees considered two alternatives for addressing marine community resource injuries and interim losses, but have identified both of them as "non-preferred". Both projects would provide for the installation of inline oil, grease and grit removal and filtration systems to separate and collect oils and greases from storm water prior to its discharge into the Fore River and Portland Harbor. One of the projects would treat storm water presently discharged into Casco Bay near Portland's East End Beach for a capital cost of approximately $175,000; the other project would treat storm water now discharged into the Fore River near Merrill's Marine Terminal for a capital cost of approximately $245,000. Neither of these projects would be effective for reducing oil and grease discharges absent the equipment to be purchased for the Portland Oil and Grease Removal Project, as the inline systems require a vacuum truck for removal of the sediments that they collect. Also, while each of these two projects would reduce the oil and grease discharged from one of the 30+ Portland discharge points into the Fore River, Back Cove and Casco Bay, the equipment from the Portland Oil and Grease Project will be used at all of the City's discharge points. Thus, the Portland Oil and Grease Project is preferable to these alternatives, since it is a stand-alone project that will compensate for the injuries and interim losses to marine communities and can more cost-effectively provide environmental benefits for marine communities in receiving waters throughout the Portland watershed.

4.4 Restoration Alternatives for Wetlands and Birds

4.4.1 Preferred Alternative: Wetland/Bird Habitat Restoration Projects

Project Description

To compensate for injuries and interim losses sustained by wetlands, waterfowl, wading birds, and shorebirds, the Trustees propose to enhance the productivity of a specific area of the Scarborough Marsh, a salt marsh in Scarborough, Maine. Scarborough marsh is located on the northwestern and southeastern sides of U.S. Highway 1 (US 1). The specific area of Scarborough marsh that has been proposed for restoration is located to the northwest of US 1, near the intersection of US 1 and Milliken Road, and is locally known as the "Dunstan River Marsh". Scarborough marsh encompasses 3,000 acres and is Maine's largest salt marsh. MDIF&W and USFWS consider it to be an important coastal wetland and waterbird habitat. USFWS has also identified this marsh as an important area for anadromous fish.

The Dunstan River marsh has been degraded due to hydrological constraints and aggressively growing invasive species, such as reedgrass and cattail, which have replaced the

naturally occurring *Spartina* and reduced the natural resource services provided by Scarborough marsh. The Trustees propose to undertake a hydrological assessment of the Dunstan River marsh to determine the most ecologically beneficial method for enhancing the site. The assessment will evaluate tidal hydrology both upstream and downstream of US 1, determine the degree of tidal restriction caused by the road; evaluate freshwater input to the system; and provide recommendations for restoring the natural hydrology of the system. Options that the Trustees would evaluate for restoring the marsh include adding an additional culvert under US 1, creating pannes and new tidal channels, and removing fill. The Trustees would determine the most effective combination of marsh improvement actions to implement subject to the specific physical, chemical, and biological requirements of the marsh.

To compensate for injuries and interim losses sustained by marine birds, namely various species of gulls and cormorants, the Trustees propose to study the feasibility of acquiring and protecting marine bird nesting habitat in Casco Bay. The Maine Wildlife Habitat Initiative, a cooperative effort involving MDIF&W, USFWS and local conservation groups, would make recommendations to the Trustees for potential acquisitions. Funds from this proposed settlement would be used, with matching funds from other sources to the extent that such funds are available, to acquire appropriate nesting island habitat which becomes available for purchase.

Restoration Objectives

The *Julie N* oil spill resulted in the injury and/or interim loss of estuarine mudflats and intertidal emergent wetland habitats in the Fore River similar to those that would be enhanced through the implementation of this project. Waterfowl, wading birds, and shorebirds that were oiled as a result of the *Julie N* oil spill frequently use Scarborough marsh. Following the spill, oiled water birds from the Fore River were observed in Scarborough marsh. Scarborough marsh has been identified as a high value habitat, so birds, wetlands, fish, and other animals in this area of Maine, including the Fore River watershed, would benefit from this proposed habitat improvement. Marine birds that were oiled as a result of the *Julie N* oil spill use island nesting habitat in Casco Bay andthereforewould benefit from any acquisition and protection of such habitat.

Environmental and Socio-Economic Impacts

Implementation of these projects would enhance bird and wetland habitats in the vicinity of the Fore River and Casco Bay. Certain construction activities that the Trustees are considering would cause some short-term environmental impacts. These include excavation of wetland areas for creation of tidal channels, short-term sedimentation due to road and marsh construction activities, and filling small wetland areas to create areas of additional open water in the marsh. These impacts would be minimized by early coordination between the Trustees and federal and state regulatory agencies and by direct oversight of the project by the Trustee agencies.

Cost

The Trustees propose to implement these projects with funds from the settlement with the Responsible Party. The estimated cost for the projects is $475,000, of which up to $25,000 could potentially be spent on the acquisition and protection of marine bird nesting habitat.

Evaluation

Scarborough marsh near US 1 has been degraded due to hydrological constraints and invasive species. If these constraints are removed, the invasive species are controlled, along with other improvements, this area would provide additional habitat nesting, brood rearing, and foraging for black ducks and other bird species injured by the *Julie N* oil spill. In addition, the public would be compensated for *Spartina* wetland habitat that was exposed to the *Julie N* oil. This project's potential for success is high, based on similar work completed in other coastal marshes. It would benefit all wildlife, fish and invertebrates inhabiting the marsh.

Acquisition of island nesting habitat by the Trustees would compensate for injuries and interim losses to marine birds as a result of the *Julie N* oil spill. Based on the past successful acquisition and protection of marine bird nesting habitat by the Maine Wildlife Habitat Initiative, the potential for success of this project is very high.

For these reasons, the Trustees believe that these projects would adequately compensate for wetland and bird injuries and interim losses caused by the *Julie N* spill, and have selected them as the preferred restoration alternatives for wetlands and birds.

4.4.2 Non-Preferred Alternatives Discussion

The Trustees considered a salt marsh restoration project in Long Creek that would provide for the removal of fill and restoration of salt marsh in an area adjacent to I-295 along the Fore River. The site is approximately 4 acres in size and is owned by the State of Maine. The project would involve the removal of 53,000 cubic yards of fill and would create approximately 4 acres of salt marsh.

The Trustees believe that this project could also adequately address the injuries and interim losses to wetlands and birds exposed to oil from the *Julie N* spill. However, Portland International Jetport is located in South Portland adjacent to the Fore River and Jetport officials have expressed concern about any project there that might increase the number of birds within the flight path of planes flying into and out of the airport. Based on that concern, the Trustees have designated this project a "non-preferred" restoration alternative.

4.5 Restoration Alternatives for Lost Public Uses

4.5.1 Preferred Alternative: Fore River Trail Project Description

Portland Trails, a nonprofit organization, would construct a one-mile section to the Fore River Trail System, which is part of a planned 30-mile green way network connecting open space, shorelines, schools, businesses, and neighborhoods throughout the City of Portland, and along the banks of the Fore River. Ten miles of this network of trails already exist and are heavily used by the public. The proposed one-mile segment would link two existing trail systems, one that is part of the eighty-five acre Fore River Audubon Sanctuary and the other located on property owned by the Wayneflete School. The path of the trail would cross property owned by the City and several private property owners; easements across these properties have already been obtained for approximately two-thirds of the distance. The Maine Conservation Corps would do most of the trail construction work and volunteers would assist Portland Trails in obtaining any necessary permits or other approvals. Portland Trails would place a series of interpretive signs along the trail to inform visitors of the importance of preserving land, the ecology, natural, and cultural history of the area, as well as the oil spill and efforts to mitigate its effects. From Thompson's Point, subsequent proposed sections of trail would proceed past Merrill's Marine Terminal, under the new Casco Bay bridge and through the proposed Harbor View Park, linking up with the Eastern Promenade Trail via Commercial Street to circumnavigate the peninsula.

Restoration Objectives

The objective of this project is to compensate the public for the lost use of Portland Harbor and the Fore River during the *Julie N* oil spill. Oil was visible along the shoreline and in the Stroudwater Marsh following the spill. Construction of the trail and educational signage would enhance the visitation experience of future trail users by increasing usage and awareness of the sensitive ecology along the Fore River.

Environmental and Socio-Economic Impacts

No adverse environmental or economic impacts are expected from this project.

Cost

The Trustees propose to implement this project with funds from the settlement with the RP. The estimated cost for implementing this project is $125,000.

Evaluation

The proposed addition to the Fore River Trail System along an area of shoreline heavily oiled by the *Julie N* spill would provide a wide array of recreational and ecological benefits to

the public. By linking two existing trail systems, the project would enhance the use and value of the entire trail system as a public recreational resource. The proposed trail segment would provide walking, biking, hiking, jogging, and scenic and wildlife viewing opportunities to the public. It would provide access to the scenic waterfront along the upper Fore River and would parallel a portion of an abandoned, historic canal. The right-of-way for the trail would also provide a corridor of preserved habitat for wildlife. The interpretive signs would enhance the recreational and ecological benefits provided by the proposed trail by educating the public and creating an outdoor classroom for use by area schools.

Portland Trails would plan, implement and manage the proposed trail segment. Because of the organization's experience in developing and managing existing trails, it is highly likely that the proposed project would be implemented successfully.

For these reasons, the Trustees believe that the Fore River Trail Project would adequately compensate for lost public uses resulting from the *Julie N* oil spill, and have selected it as the preferred restoration alternative for lost public uses.

4.5.2 Non-Preferred Alternatives Discussion

The Trustees considered a project consisting of the construction and installation of park infrastructure at the old touch down for the Million Dollar Bridge in South Portland (the "Thomas Knight Park Project"), but have designated it a "non-preferred" restoration alternative. Since the Casco Bay Bridge has opened, the Million Dollar Bridge has been dismantled and the City has drafted plans to transform this section of the waterfront into a scenic coastal park. Although this project would provide adequate compensation for the lost public uses resulting from the *Julie N* oil spill, the Trustees believe that the Fore River Trail Project is preferable as a restoration alternative. The Trustees selected the Fore River Trail Project over this project because it would be constructed along a portion of the shoreline that was more heavily oiled by the *Julie N* spill and would provide more shoreline access points and educational opportunities for the public than this project. For these reasons, the Trustees have designated the Thomas Knight Park Project as a "non-preferred" restoration alternative.

The Trustees also considered an alternative consisting of the purchase of certain open spaces identified by the South Portland Land Trust that are adjacent to the South Portland Greenbelt and Pleasantdale Cove in South Portland. Pleasantdale Cove encompasses the area from the site of the Casco Bay Bridge, to the ends of Mildred, Chapel, and Chestnut Streets. The alternative calls for the purchase of open spaces adjacent to the Greenbelt area and the shoreline of Pleasantdale Cove. The Trustees prefer the Fore River Trail Project to this alternative because it would be constructed along a portion of the shoreline that was more heavily oiled by the *Julie N* spill and would provide more shoreline access and educational opportunities for the public. For these reasons, the Trustees have designated this project as a "non-preferred" restoration option.

4.6 Essential Fish Habitat Consultation

The Magnuson-Stevens Act (16 U.S.C. 1801 et seq.) as amended and reauthorized by the Sustainable Fisheries Act (Public Law 104-297) established a program to promote the protection of essential fish habitat (EFH) in the review of projects conducted under Federal permits, licenses, or other authorities that affect or have the potential to affect such habitat. After EFH has been described and identified in fishery management plans by the regional fishery management councils, Federal agencies are obligated to consult with the Secretary of Commerce with respect to any action authorized, funded, or undertaken, or proposed to be authorized, funded, or undertaken, by such agency that may adversely affect any EFH.

The Portland Oil and Grease Removal Project and the Fore River Trail Project will not adversely affect EFH, as neither project is located within EFH. Both projects are located in upland areas and will not involve the alteration of EFH.

The Scarborough Marsh Restoration Project will take place in waters discharging into Saco Bay. Species for which Saco Bay has been designated EFH for one or more life stages and which use the mixing water/brackish salinity zone of the Scarborough River estuary include the following species: pollock (Pollachius virens), white hake (Urophycis tenuis), winter flounder (Pleuronectes americanus), windowpane flounder (Scopthalmus aquosus), American plaice (Hippoglossoides platessoides), Atlantic sea herring (Clupea harengus), bluefish (Pomatomus saltatrix), and Atlantic mackerel (Scomber scombrus). These species are managed by the New England and Mid-Atlantic Fishery Management Councils under the following fishery management plans (FMP): Northeast Multispecies; Atlantic Herring; Bluefish; and Squid, Mackerel, and Butterfish FMPs.

The Scarborough marsh restoration project described in Section 4.4.1 proposes to enhance a degraded salt marsh caused by tidal restrictions and aggressively growing invasive plant species such as reedgrass (Phragmites australis) and cattail (Typha angustifolia). While exact project details will be determined after a thorough ecological and hydrological assessment is conducted for the marsh system, options the Trustees will consider for enhancing the degraded site include adding an additional culvert under U.S. Route 1, creating pannes and new tidal channels to increase tidal flow into the Phragmites and Typha dominated areas, and removing fill. These actions should serve to enhance tidal flow into these areas to reverse the spread of Phragmites and Typha and encourage the growth of typical salt marsh vegetation (e.g. Spartina spp.). Resident salt marsh fish species will directly benefit from the additional tidal flow to areas of the marsh that are now receiving only infrequent storm tides as new foraging habitat will be opened up. Short-term turbidity plumes in the water column of the Dunstan River could result from various restoration options such as tidal channel creation and/or fill removal. However, turbidity caused by such actions should not be significantly different from ambient conditions with the implementation of appropriate Best Management Practices. For the foregoing reasons, the Scarborough marsh restoration project will not adversely affect EFH for any of the species or life stages listed above.

After conceptual restoration project details were developed, the Trustees evaluated and coordinated their plans with the National Marine Fisheries Service (NMFS) Northeast Region to ensure no adverse impacts to EFH. If the proposed project plans are substantially revised or if

new information becomes available that affects this analysis then consultation with the NMFS Northeast Region will be undertaken. In addition, marsh restoration activities will requires a Section 404 (Clean Water Act) permit from the U.S. Army Corps of Engineers. Specific restoration activities will undergo EFH consultation through the Corps' permit process.

4.7 Summary of Preferred Restoration Alternatives and Costs

The Trustees have selected compensatory restoration alternatives which they believe will enhance the natural recovery of resources injured by the *Julie N* oil spill, and/or will provide additional resource services to compensate the public for interim losses pending natural recovery. The Trustees believe that the four preferred projects, the Portland Oil and Grease Removal Project, the Wetland/Bird Habitat Restoration Projects and the Portland Trails Project, would adequately address the injuries and interim service losses resulting from the *Julie N* oil spill. In addition to the costs of implementing the preferred restoration alternatives, the Trustees must also recover any costs that they incur overseeing the implementation of the projects. Exhibit 4-1 presents the total estimate of all costs, including the estimated costs for implementing the preferred restoration alternatives and the Trustees' estimate of their oversight costs. The cost figures set forth below are estimates. The actual costs incurred for the projects and oversight may be somewhat higher or lower.

Exhibit 4-1

SUMMARY OF PREFERRED *Julie N* OIL SPILL RESTORATION ALTERNATIVES AND COSTS

Resource/Service	Preferred Restoration Alternative	Estimated Cost
Marine Community	Portland Oil and Grease Removal Project	$350,000
Wetlands and Birds	Wetland/Bird Habitat Restoration Project	$475,000
Lost Public Uses	Fore River Trail Project	$125,000
Total Estimated Cost of Implementing Preferred Restoration Alternatives		**$950,000**
Total Estimated Trustee Oversight Costs		**$ 50,000**
Total Restoration and Oversight Costs Payment by RP to Trustees		**$1,000,000**

If the Trustees obtain new information indicating that any of the preferred projects should not be implemented, or if excess funds are available after completion of the projects, the Trustees will select alternative projects for implementation and will provide further public notice to the extent required by OPA and NEPA.

Appendix A

Response to Comments

Introduction

This appendix to the Final Restoration Plan/Environmental Assessment (RP/EA) contains the Trustees' responses to comments received from the public on the Draft RP/EA. Public review of the Draft RP/EA is an integral component of the restoration planning process. Through the public review process, the Trustees sought public comment on the analyses used to define and quantify natural resource injuries and the methods proposed to restore the exposed and/or injured natural resources or replace lost resource services. The Draft RP/EA provided the public with information about the nature and extent of the natural resource injuries identified and restoration alternatives evaluated.

The Draft RP/EA was made available to the public on January 7, 2000. The public had an opportunity to provide written comments on this document for consideration by the Trustees. The public comment period was from January 24, 2000 to March 9, 2000. In addition, a public meeting was held in Portland, Maine, on February 10, 2000. The transcript of the February 10, public meeting and the one written comment which was received are attached hereto.

Public review of the Draft RP/EA was consistent with all state and federal laws and regulations that apply to the natural resource damage assessment process, including Section 1006 of the Oil Pollution Act of 1990 ("OPA"), 42 U.S.C. §2706, the regulations for Natural Resource Damage Assessments under OPA (15 CFR Part 990), the Natural Environmental Policy Act ("NEPA") (42 U.S.C. §4321, *et seq.*), and the regulations implementing NEPA (40 CFR Part 1500, *et seq.*).

The Trustees have carefully considered all comments received from the public. The Trustees received comments either orally or in writing from the persons listed below concerning the November 29, 1999 Draft RP/EA. Below, the Trustees have provided a summary of the comments submitted as well as their response to the comments. The Trustees have not made any changes to the November 29, 1999 Draft RP/EA as a result of the comments submitted. However, the Trustees did make some revisions to the November 29, 1999 Draft RP/EA to clarify several issues in the document, provide additional information concerning several legal and administrative issues, and to reflect that the RP/EA was now in final, as opposed to draft, form.

Summary of Comments Received at Public Hearing, and Trustee's Responses

Stephanie Cox, Scarborough Conservation Commission
C.D. Armstrong, Resident of Scarborough
Ann Delahanty, Resident of Scarborough

Comment: These commenters stated their support of the Trustees' Draft RP/EA, specifically the Scarborough Marsh restoration project which will result in the enhancement of salt marsh habitat.

Trustees' Response: The Trustees thank these individuals for their support. The Trustees consider Scarborough Marsh to be an important wetland habitat. Scarborough Marsh has been identified as high value habitat for birds, wetlands, fish, shellfish, and other natural resources. No other viable alternatives were identified in the vicinity of the Fore River. The Trustees believe that implementation of this project will adequately address the injuries and interim losses to wetlands and birds exposed to oil from the Julie N oil spill.

Erno Bonebakker, Resident of Portland

Comment: This commenter stated his disappointment concerning the Trustees' proposal to implement wetland restoration in Scarborough Marsh as opposed to the Fore River, where the spill occurred. He also urged the Trustees to strive for the best possible outcome on the Scarborough Marsh project.

Trustees' Response: The Trustees thank this commenter for his comments, and agree that it would have been ideal to conduct all of the restoration projects in the immediate vicinity of the actual injuries. However, the Trustees carried out an extensive search for wetland restoration projects in the Fore River estuary and were unable to find any projects that met the criteria for selection to address this category of injury. As described in the RP/EA, the Trustees evaluated a potential wetland restoration project along Long Creek, but determined that this project was not feasible because of concerns raised by officials at the Portland International Jetport. The Trustees also thank Mr. Bonebakker for his words of encouragement on the Scarborough Marsh project.

Tom Jewel, Board of Trustees of Portland Trails

Comment: This commenter supports the Trustees' plan to construct a one-mile recreational trail along the Fore River that will link two existing trail systems, one that is part of the 85-acre Fore River Audubon Sanctuary and the other located on property owned by the Waynefleet School.

Trustees' Response: The Trustees thank this commenter for his support. The Trustees agree that the proposed addition to the Fore River Trail System will provide a wide array of recreational and ecological benefits to the public, and will adequately compensate the public for lost public uses resulting from the oil spill.

Joe Payne, Executive Director, Friends of Casco Bay

Comment: This commenter stated his disappointment concerning the Trustees' proposal to implement wetland restoration in Scarborough Marsh as opposed to the Fore River, where the spill occurred. He also commented that the Trustees could have made more efforts at outreach to the community to explain the final restoration plan and how it was reached.

Trustees' Response: The Trustees thank this commenter for his comments, and agree that it would have been ideal to conduct all of the restoration projects in the immediate vicinity of the actual injuries. However, the Trustees carried out an extensive search for wetland restoration projects in the Fore River estuary and were unable to find any projects that met the criteria for selection to address this category of injury. As described in the RP/EA, the Trustees evaluated a potential wetland restoration project along Long Creek, but determined that this project was not feasible because of concerns raised by officials at the Portland International Jetport.

The Trustees also thank Mr. Payne for his comments on public outreach. The Trustees made extensive efforts to reach out to the community in the earlier stages of the process, as the assessment was being conducted and the restoration projects were being selected. The Trustees have also worked with the local media to ensure that the final plan was given adequate press coverage. And finally, the Trustees have ensured that all requirements for legal notice and opportunity to comment were satisfied. The Trustees feel that these efforts to inform the public have been adequate.

Summary of Written Comments Received, and Trustee's Responses

Elsa Martz, Resident of Harpswell, Maine

Comment: This written comment proposed the funding of a restoration project to reopen the causeway to Dingley Island, in Harpswell, to restore water flow and protect shellfish beds.

Trustees' Response: The Trustees agree that this project has potential to benefit Casco Bay's marine resources. However, it has no apparent connection to the birds or wetland habitat which suffered injury in the vicinity of the Julie N oil spill. To compensate for injuries and interim losses sustained by wetlands and birds the Trustees have proposed to enhance the productivity of Scarborough Marsh. The Trustees also note that the Dingley Island proposal is much further removed from the Fore River than the Scarborough Marsh proposal is. The Trustees have referred this proposal to the MDEP's Mitigation Banking Program and NOAA's Community-based Restoration Program for potential future funding.

ORIGINAL

STATE OF MAINE

****

RE: DRAFT RESTORATION PLAN/ENVIRONMENTAL ASSESSMENT
JULIE N OIL SPILL

****

DATE OF HEARING: February 10, 2000

LOCATION: Portland City Hall
Portland, Maine

1
2
3 TRANSCRIPT OF PROCEEDINGS
4
5 MR. MARGERUM: Good evening, ladies and
6 gentlemen. I would like to welcome you to this public
7 hearing on the Draft Restoration Plan and Environmental
8 Assessment relating to the oil spill from the Julie N tanker
9 vessel on September 27, 1996. The purpose of this hearing
10 is to receive public comment on the draft plan, which has
11 been available to the public now for a few weeks, and is
12 available on the internet at the DEP-Bureau of Remediation
13 home page. The restoration plan has been prepared by the
14 Natural Resources Trustees, which are the government
15 agencies charged with defending the public resources
16 impacted by the oil spill. The Trustees have prepared this
17 plan pursuant to the Federal Oil Pollution Act of 1990, as
18 well as the State of Maine's Oil Discharge Prevention and
19 Pollution Act. The draft plan attempts to assess and
20 quantify the injuries to the various natural resources and
21 natural resource services impacted by the oil spill. The
22 plan then goes on to propose specific actions to mitigate
23 those injuries by enhancing the natural recovery of the
24 resources and/or providing additional resource services to
25 compensate the public for losses pending natural recovery.

1 Copies of the plan are available this evening on the table
2 by the back door, as are copies of the public notice. It
3 should be pointed out that this plan does not have anything
4 to do with the private claims by persons, businesses, or
5 private organizations which may have suffered specific
6 injuries from the spill. Those claims are handled through a
7 separate process which is not subject of tonight's hearing.
8 It is my understanding that the responsible party in this
9 case has already expended more than nine million dollars on
10 those sorts of claims, though. My name is Mark Margerum,
11 and I work for the Maine Department of Environmental
12 Protection. The DEP is one of the six state and federal
13 agencies designated as Natural Resources Trustees in this
14 matter. Joining me at the head table are representatives of
15 four of the other five Federal and State Trustees. Start at
16 the end, Rich Dressler, Maine Department of Inland Fish and
17 Wildlife; Gordon Russell, U.S. Department of the Interior
18 Fish and Wildlife Service; Seth Barker, Maine Department of
19 Marine Resources, and immediately to my right, John Catena,
20 U.S. Department of Commerce, National Oceanic and
21 Atmospheric Administration. Before we receive your
22 comments, we'd like to summarize the draft restoration plan
23 for you. The injuries to the public natural resources have
24 been divided into three categories: Marine Communities,
25 Wetlands/Birds, and Public Uses. The Trustees have

1 identification a number of potential projects to address
2 those injuries, assess those projects, and put together the
3 plan which is the subject of this hearing. I'll summarize
4 the Public Uses portion of the plan, and then Seth Barker
5 will summarize the Marine Communities portion, and Rich
6 Dressler will summarize Wetlands/Birds section. As you
7 know, Portland Harbor is used extensively by the public for
8 various recreational activities which were impacted by the
9 spill. The draft restoration plan provides $125,000 to
10 compensate for this general class of injuries to public uses
11 of the natural resources. This money is proposed to be used
12 by the Portland Trails Organization to construct a one-mile
13 section of trail along a portion of the shore that was
14 heavily oiled by the spill. This trail would be part of the
15 Fore River Trail System, which is part of the planned
16 30-mile green way network connecting open space, shorelines,
17 schools, businesses, and neighborhoods throughout the City
18 of Portland and along the banks of the Fore River. Ten
19 miles of this network of trails already exist and are
20 heavily used by the public. The proposed one-mile segment
21 would link two existing trail systems, one that is part of
22 the 85-acre Fore River Audubon Sanctuary and the other
23 located on property owned by the Wayneflete School. The
24 proposed trail segment would provide walking, biking,
25 hiking, jogging, and scenic and wildlife viewing

1 opportunities to the public. The project would include a
2 series of interpretive signs along the trail to inform
3 visitors of the importance of preserving land, the ecology,
4 natural, and cultural history of the area, as well as the
5 oil spill and efforts to mitigate its effects. The
6 objective of this project is to compensate the public for
7 the lost use of Portland Harbor and the Fore River during
8 the Julie N oil spill. Construction of the trail and
9 educational signage would enhance the visitation experience
10 of future trail users by increasing usage and awareness of
11 the sensitive ecology along the Fore River. Seth Barker of
12 the Department of Marine Resources-Portland Oil and Grease
13 Removal Project, which is proposed to address impacts to
14 Marine Communities.
15 MR. BARKER: Thank you, Mark. The oil and
16 gas removal project is really straightforward. As I'm sure
17 most of you are aware, as a result of the spill there are
18 both short-term and long-term exposures to potentially
19 harmful concentrations of oil. During the cleanup a great
20 deal of effort went into weighing potential damage and
21 recovery of oil against the actual ability to recover
22 spilled oil. My understanding is the recovery rate was --
23 is really exceptionally good for a spill of this sort, but
24 oil remaining in the system. Because some of the components
25 named, particularly PAHs, PAHs are toxic to marine organisms

1 and also a public health concern in seafood. Any efforts to
2 reduce or eliminate oil and grease from continuing to reach
3 the Fore River would be beneficial. As part of the Marine
4 Communities Group, we've looked at a wide range of organisms
5 and found a number of habitats in the Fore River and used a
6 number of different methods to identify potential impacts.
7 The end result was really reflected in this proposal in an
8 attempt to find a way to reduce levels in the future of
9 harmful PAHs. I think that it is all quite evident that
10 once the oil is in the system it's hard to get it out, but
11 any efforts, particularly those that are proposed by
12 Portland Public Works, to reduce, as I said, additional
13 quantities remaining in the system would be beneficial.
14 Thank you.
15 MR. MARGERUM: And now Rich Dressler of the
16 Maine Department of Inland Fish and Wildlife will speak to
17 the Scarborough Marsh Wetland/Bird Habitat Restoration
18 Project.
19 MR. DRESSLER: My name is Richard Dressler.
20 I'm the wildlife habitat group leader in our Bangor office.
21 I was involved with the response to the spill from day one
22 and supervised the IF&W response to the Julie N spill. We
23 joined forces with the U.S. Fish and Wildlife Service to
24 accomplish two major objectives. One was to recover and
25 rehabilitate birds and other animals that -- oil by the

1 spill. We also began immediately to collect information to
2 document the effects of oil and wildlife and habitats.
3 During this process we were assisted greatly by many members
4 of the Friends of Casco Bay and other volunteers. We
5 conducted daily surveys in search of oiled birds throughout
6 October and continued surveys in November. Bird
7 observations were recorded thoroughly each day, and we
8 documented present --
9 COURT REPORTER: Excuse me, I'm having a hard
10 time hearing you.
11 MR. DRESSLER: As indicated in the report,
12 you will see that we captured or collected 40 birds. Of
13 those 40, 15 died, 12 were dead on arrival at the rehab
14 center, 15 died during attempts to rehabilitate them.
15 Twelve birds were released, and one bird was held in
16 captivity because of injuries not related to the oil spill.
17 During the daily surveys we conducted through October, as
18 indicated, we observed birds with oil on them. Some were
19 impossible to capture or even approach. In total, there
20 were over 1,600 cumulative observations during that period
21 of oil -- of birds with visible oil on them. As indicated
22 in reports, some of those birds could have been counted more
23 than once. In regard to the effects on habitat, we focused
24 on the effects in the wetlands along the Fore River.
25 Surveys conducted in October 1996 indicated that 25.6 acres

1 received some degree of oiling from the spill. Twelve of
2 those acres were documented as having heavy oiling. In
3 regard to these injuries, we looked at a number of
4 possibilities to compensate for these losses, and as part of
5 this project we're proposing to conduct a restoration
6 project in the Scarborough Marsh. This area is well within
7 the flying range of many of these birds. In fact, we had
8 documented birds -- documentation of birds with oiling in
9 the Scarborough Marsh area. This area was selected because
10 of its opportunities to address both the bird and wetland
11 injuries, and as such we're proposing to use $475,000 of the
12 settlement to develop a project in that area to restore the
13 salt marsh habitat to benefit the birds and also to deal
14 with the wetland loss as a result of the oil. Our goals in
15 the Scarborough Marsh are to increase waterfowl and wading
16 birds, shorebirds, productivity, and doing that through a
17 variety of options. We will be doing initial studies to
18 determine what will be most effective in that area in
19 regards to the utilization of the $475,000. In addition,
20 this option also allows us to spend some portion of those
21 funds on habitat acquisition for the marine bird -- during
22 the spill. Thank you.
23 MR. MARGERUM: Thank you. As you can see,
24 this hearing is being recorded, and the transcript will be
25 made part of the administrative record in this matter.

1 After tonight's hearing, the public comment period will be
2 held open for the submission of written comments until March
3 9. Written comments should be sent to Donald Frankel at the
4 U.S. Department of Justice, whose address appears on the
5 public notice and which also appears on page 1 2 of the
6 draft plan, both of which are on the back table. When the
7 public comment period is closed, the trustees will review
8 all the comments received and will be issuing a summary of
9 responses to public comment. The Trustees will also be
10 issuing a final draft of the restoration plan modified as
11 necessary to respond to those public comments which are
12 found to require changes to the plan. If you would like to
13 receive a copy of the final plan and the response to public
14 comment, please be sure you put your name and address on the
15 mailing list on the table by the entrance. Also on that
16 table is a sign-up sheet for anyone who wishes to make a
17 comment this evening. Anyone who does plan to testify and
18 is not signed up, there is another sheet out there now, and
19 you may do so. I will call on speakers in the order they
20 have signed up. When we have worked through the list, I
21 will ask if there is anyone else who wishes to speak, and
22 then we will close the hearing. As I said, the testimony
23 will be transcribed. In order for our reporter to record
24 your testimony properly, please speak into the microphone at
25 the podium. When you come to the microphone, please state

your name clearly. If you're representing an organization and you wish your comments this evening to be recorded as being on behalf of that organization, please state the organization as well. If you have written copy of your statement or other documents you wish to submit, you may give them to me at that time, and I will enter them into the public record. Please take into consideration the number of people who wish to speak tonight and the need to hear from everyone, and keep your comments to an appropriate length. If you have a presentation which would take more than five or ten minutes, please let me know, and we'll try to accommodate that as well. At this time I would like to recognize the first speaker.

(OFF RECORD)

MR. MARGERUM: Perhaps people didn't understand the purpose of this sign-up sheet.

(OFF RECORD)

MR. MARGERUM: Stephanie Cox.

MS. COX: I do have some comments for you.

MR. MARGERUM: She's presented with me a document entitled Testimony of the Scarborough Conservation

1 Commission Regarding the Julie N Settlement, dated February
2 10, 2000.
3 MS. COX: My name is Stephanie Cox. I'm here
4 on behalf of the Scarborough Conservation Commission. First
5 of all, thank you for the opportunity to address you tonight
6 regarding the Julie N settlement. On behalf of the
7 Scarborough Conservation Commission, we would like to affirm
8 our support for the Maine Inland Fisheries and Wildlife and
9 the U.S. Fish and Wildlife recommendations. We're
10 particularly in favor of the proposal to spend $475,000 of
11 the one million dollar settlement on habitat restoration in
12 the Scarborough Marsh, which is Maine's largest saltwater
13 marsh. The Scarborough Marsh provides unique wildlife
14 habitat for a great variety of plants and animals, offers
15 important opportunities for hunting, fishing, boating,
16 nature study, and surrounds tidal flats with commercially
17 important shellfish beds. Scarborough Marsh accounts for 15
18 percent of the State's total salt marsh area, and virtually
19 all of it is in public ownership and managed by the Maine
20 Department of Inland Fisheries and Wildlife. Scarborough
21 Marsh is also an important regional economic resource, with
22 income derived from clamming, licensing, and tourism. The
23 Scarborough Conservation Commission hopes you will take
24 advantage of this opportunity to benefit the Scarborough
25 Marsh. Human activities have significantly altered the

1 marsh, and according to a recently released report by the
2 Maine Audubon Society, the most significant threat continues
3 to be roads and railroads that cross the marsh and form
4 barriers to the flow of tidal water. The spread of invasive
5 plant species, particularly Common Reed or Phragmites
6 australis is abetted by tidal restrictions and poses a
7 significant threat to the marsh today. Habitat and wildlife
8 in the Scarborough Marsh are similar to those found in the
9 Fore River area which was impacted by the spill. However,
10 options to use Julie N money to restore marsh habitat closer
11 to the Portland Jetport would likely not yield as great an
12 impact for wildlife and for Maine's economy as would the
13 choice to invest those dollars in the Scarborough Marsh.
14 Therefore, funds from the Julie N settlement could be used
15 to restore the marsh, enhancing both natural resource and
16 economic values for the people of Maine, and we urge you to
17 give support to the proposal to spend the $475,000 on the
18 Scarborough Marsh. Thank you for the opportunity to address
19 you tonight.
20 MR. MARGERUM: Thank you. Is there anyone
21 else here who would like to offer comment this evening?
22 MR. ARMSTRONG: I don't have any prepared
23 remarks, but my name is C.D. Armstrong. I'm a Scarborough
24 resident. I'm involved in a group of people who is trying
25 to form a grass roots organization to promote restoration on

1 the Scarborough Marsh, and we would strongly support the
2 effort to spend some of this money for bettering the
3 Scarborough Marsh. I have walked the Fore River area. I
4 have walked the Scarborough Marsh, and it would seem to me
5 it would give a real strong bang for the buck to spend the
6 money there in Scarborough Marsh versus the Fore River.
7 MR. MARGERUM: Thank you very much.
8 MS. DELAHANTY: Good evening, trustees of the
9 settlement, ladies and gentlemen, and guests. My name is
10 Ann Delahanty. My husband and I are residents in
11 Scarborough. I'm a biologist by trade and have been working
12 on the Scarborough Marsh as a volunteer through a number of
13 organizations, the Cooperative Extension Water -- Program,
14 the volunteer water testing group that's there in
15 Scarborough, it's actually a committee that reports to town
16 council, and also the group that C.D. Armstrong is with, the
17 Friends of Scarborough Marsh. Through my work as a
18 volunteer, I've had a firsthand look the at type of negative
19 impact that development has had on the marsh, including
20 ditching and filling and the impact of recent municipal
21 growth, and I feel that the watershed restoration monies
22 would be well spent in Scarborough and believe that there
23 would be both commercial and recreational value for the
24 restoration project.
25 MR. MARGERUM: Thank you. Do we have anyone

else who would wish to offer comment this evening?

MR. BONEBAKKER: My name is Erno Bonebakker. I'm a resident of Portland. I appreciate the importance of Scarborough Marsh, however, as a resident of Portland within sound and smell of the spill, I am simply for the record noting my disappointment that the restoration of the wetlands couldn't be done closer to home. That being said, I would urge the trustees to ensure that they do the best restoration that can be done in terms of making fundamental improvements and correction it is to the human impacts of the Scarborough Marsh so that there will not only be an enhancement of bird habitat but truly restoration of the wetland in compensation for the damages that were done in the Fore River -- to the Fore River wetlands. Thank you.

MR. MARGERUM: Thank you very much.

MR. JEWEL: Good evening. My name is Tom Jewel. I'm on the Board of Trustees of Portland Trails. I was asked to attend and pinch hit for our executive director who is out of town today. Portland Trails, of course, supports the proposed settlement. We've spent a lot of time and money over the past few years building trails in the upper Fore River area. The trail we're working on now would link those trails to trails we're working on in the downtown area, down the lower Fore River and along the harbor and Eastern Promenade. Some of that has already been designated

as part of the East Coast Green Way, which is the trail from Maine to Florida that's being worked on, and this is going to be a vital link in that bigger system. We have achieved permission from most of the landowners on the route to build the trail. Wetlands delineations have been done, and we expect the Maine Conservation Corps to be out there this summer building this trail if the settlement stands. We welcome the opportunity to use some of this money and provide public access along the Fore River, and we think it will be a great asset to the people of greater Portland.

MR. MARGERUM: Is there anyone else who would like to offer their comments?

MR. PAYNE: Good evening, trustees. Thank you for the opportunity. My name is Joe Payne. I'm executive director of Friends of Casco Bay, and I think first my notes in general -- more general notes, not specific to this restoration, but as bay keeper, the other hat I wear, I get a lot of questions in my day-to-day work about the things that affect the bay, and certainly the spill and the restoration are no different. The two most common questions that I got -- observation questions I got after the restoration plan was announced was, geez, that doesn't sound like much money for a major oil spill in Casco Bay, and the other one invariably was about the Scarborough Marsh, which seems like we're setting up a little

1 competition here between Portland Harbor and Scarborough
2 Marsh, which is unfortunate. I think what could happen in
3 general is it's difficult for anyone in the public to
4 comment intelligently about this process since the rules
5 under OPA90 are hard to understand, and the agencies are
6 still interpreting what they can and can't do under those.
7 It's hard to understand what could be done with this money,
8 what couldn't be done, but I think in the future, while
9 there was press coverage of the restoration plan, the
10 trustees may be able to be more proactive about what wasn't
11 done, what was considered, and how this amount was derived,
12 giving some background, because really we have only gotten
13 the bones, and as I know being an intimate observer of the
14 spill and peripheral participant in the process that's gone
15 on in the year since the spill, a lot of the proposals that
16 were considered but didn't make the cut, etcetera, and I
17 think some of that information, it would be better for the
18 community if that information got out to the community. So
19 perhaps an effort at more outreach would explain to the
20 community and make some people more comfortable with the
21 questions they have about it, so those general comments on
22 the process. The Scarborough Marsh issue, as you can
23 imagine, I'm pretty vocal on my interests, being with
24 Friends of Casco Bay and Casco Bay keeper. Casco Bay is my
25 world. I don't look outside that box. There have been lots

1 of arguments. One is bang for the buck in Scarborough. I
2 think that's a non-starter. When you start talking about
3 doing restoration outside of the watershed, you could make
4 that argument for anything. I'm sure there is a project
5 somewhere that you get more bang for the buck than any
6 restoration ever done, so I don't think that that's a valid
7 comment about what to do. I do understand that Scarborough
8 is within the flyway or do we call it maybe the fly shed of
9 the birds in this area. You know, that makes sense. I
10 understand we don't want to lure birds to the airport to
11 suck them through jet engines. That makes sense. It would
12 seem that at least a discussion -- I mean, what we're
13 presented with is a done deal -- a discussion perhaps
14 because I think one has to think there must be a restoration
15 project in the area of impact that doesn't give you the bang
16 for the buck, that doesn't draw birds to the airport, but
17 that does something where the impact happened because the
18 net result here is the Fore River, Portland/South Portland
19 Harbor suffered diminishment because of the impact of the
20 oil, but the money is going to improve somewhere else. So
21 we have permanent diminishment here while we're using the
22 money to improve where we as a community of species have
23 diminished before but not due to this oil spill. I think
24 the project in Scarborough is a great project. I'm wholly
25 in favor of the project itself. I'm really glad to see

Friends of Scarborough Marsh and support what they're trying to do. Again, I'm not sure that the argument holds that this is the best way to use the oil spill money. I think those are my comments. Thank you very much.

MR. MARGERUM: Thank you. Is there anybody else who would like to offer a comment this evening? If not, I guess we can close this public hearing. I would note again that the public comment period will be held opened until March 9 for the receipt of written public comments. The transcript from tonight's hearing will be put into the public record, and all public comments will be responded to. Thank you all for coming out this evening. Good night.

(Concluded at 7:30 p.m.)

1 CERTIFICATE

2

3 I, Sheila Glusker, a Notary Public in and for
4 the State of Maine, hereby certify that on the 10th day of
5 February, 2000, the within-named speakers were sworn to
6 testify to the truth, the whole truth, and nothing but the
7 truth in the aforementioned cause of action and that the
8 foregoing is a true and accurate record as taken by me by
9 means of computer-aided machine shorthand.

10

11 I further certify that I am a disinterested
12 person in the event or outcome of the above-named cause of
13 action.

14

15 In witness whereof, I subscribe my hand this
16 13th day of March, 2000.

17

18

19 _____

20 Sheila Glusker

21 Notary Public

22

23

24

25

Elsa Martz
57 Spruce Cove Road
Cundy's Harbor
Harpswell, ME 04079
w: 207-725-3308
h: 207-725-2411
emartz@bowdoin.edu

January 13, 2000

Sarah Thompson
Industrial Economics, Inc
2067 Massachusetts Ave
Cambridge, MA 02140

Dear Sarah Thompson:

There was a recent news story about the fine charged to the oil tanker Juliana for the oil spill in Portland Harbor. Is your company making recommendations concerning where that money will be used?

Somewhere in your files, you probably still have 1998 and 1999 correspondence from me about a small project to reopen the causeway to Dingley Island to restore the natural flow and protect one of Harpswell's richest clam flats. This site is in Casco Bay; so if the Juliana fine could be used to restore an area in the same Casco Bay where the oil spilled, it would be appropriate.

Estimated costs for a small 20' precast bridge unit plus pilings, excavation, roadway, guardrail, and temporary causeway construction and removal is about $150,000 -- or, to add on a generous contingency cushion, make it $200,000. (Installing an arch culvert, which would be less effective in restoring the site, would cost perhaps half that amount, but it might as well be done right.)

Can the amount of $200,000 from the Juliana fine be assigned to the restoration of the Dingley Island causeway and clam flat? Please let me know about this and any other suggestions you have. Many thanks.

Sincerely,

Elsa Martz

Elsa Martz
12 Lower Spruce Shore Road
Cundy's Harbor
Brunswick, ME 04011
home 207-725-2411, work 207-725-3308
emartz@bowdoin.edu

Sarah Thompson
Industrial Economics, Inc
2067 Massachusetts Ave
Cambridge, MA 02140

February 1, 1999

Dear Sarah Thompson.

Last September we had a telephone conversation about the Dingley Island causeway project and your company's role in advising on the fine for the Juliana oil spill in Portland Harbor This letter is to update you on the restoration project and ask if you have know of any businesses who have been fined, or will be fined, and who need a restoration site

There is a coastal restoration site in Harpswell (Casco Bay) with almost-ready-to-go plans and estimated costs. A very brief summary of this photogenic project follows. I hope you will keep this information available for future reference, in case Industrial Economics, Inc. might be able to help in some way.

Reopening the causeway to Dingley Island with a small 20' bridge.
This project will restore a natural area and protect the future of one of Harpswell's richest clam flats. Around 1946, the original 1890s causeway, which had a small bridge, was covered over, widened, and raised. The enlarged structure became a permanent dam to the tidal inlets on either side. By blocking along-shore current flow between the mainland and the island, silt has been accumulating. Reopening the causeway with a small bridge will improve and protect this resource by restoring the natural water flow.

The urgency and need for the project is demonstrated by the fact that silt has been accumulating for 50 years and now there are no clams in the flats within about 600 feet or more of the causeway Although years ago the seals swam into the causeway area, now at high tide, the water is only six feet deep due to the heavy silt accumulation This rich resource is slowly deteriorating, and eventually the clam flats will become a salt marsh.

My research into bridge design has shown that a Conspan bridge design may be the most effective. both in costs and in construction time Bedrock is at approximately 20' Estimated costs for the precast bridge units, pilings, excavation, roadway, guardrail, and temporary causeway construction and removal:
→ $140,000.

This is strictly a grassroots project, with the support of neighbors and a number of environmental organizations and agencies including the Friends of Casco Bay, Maine Audubon, Casco Bay Estuary Project, US Fish & Wildlife, and the Maine Department of Marine Resources I also have worked with the Maine DOT and DEP concerning this project

Do you have any suggestions for this project? This site is ready for action. Thanks very much for your time. I look forward to hearing from you

Sincerely,

Elsa Martz

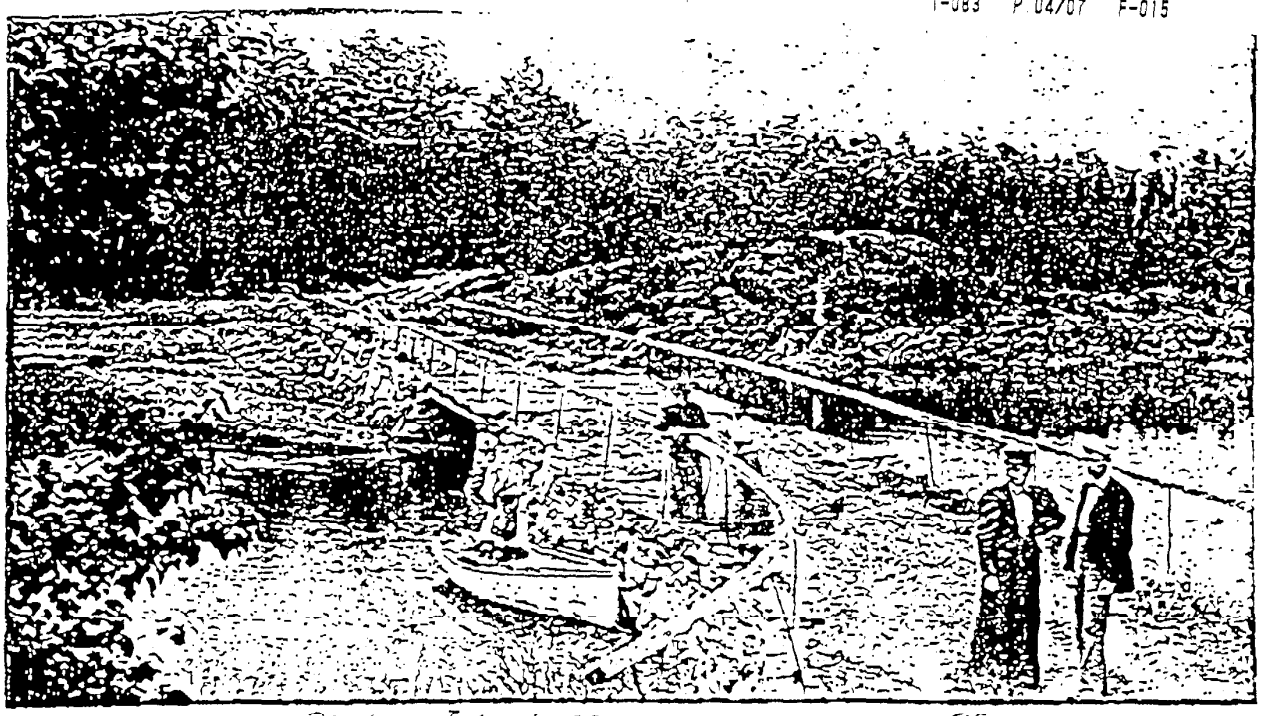

Dingley Island causeway 1890.

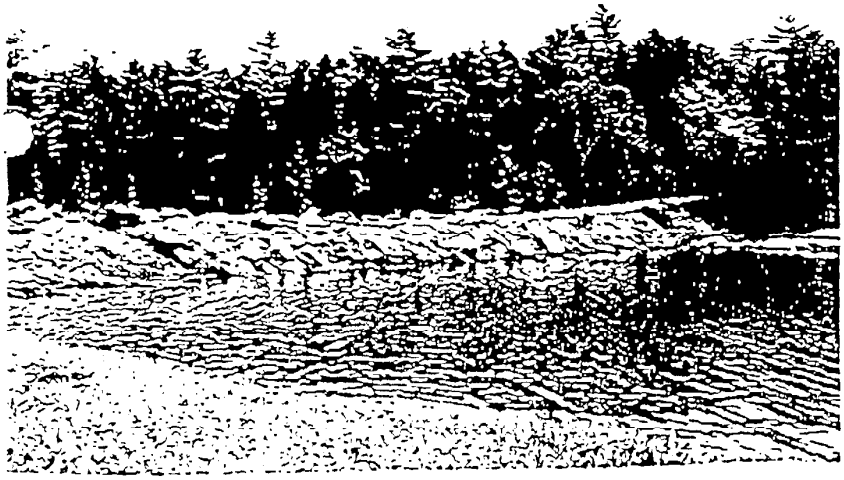

1996

clam flats

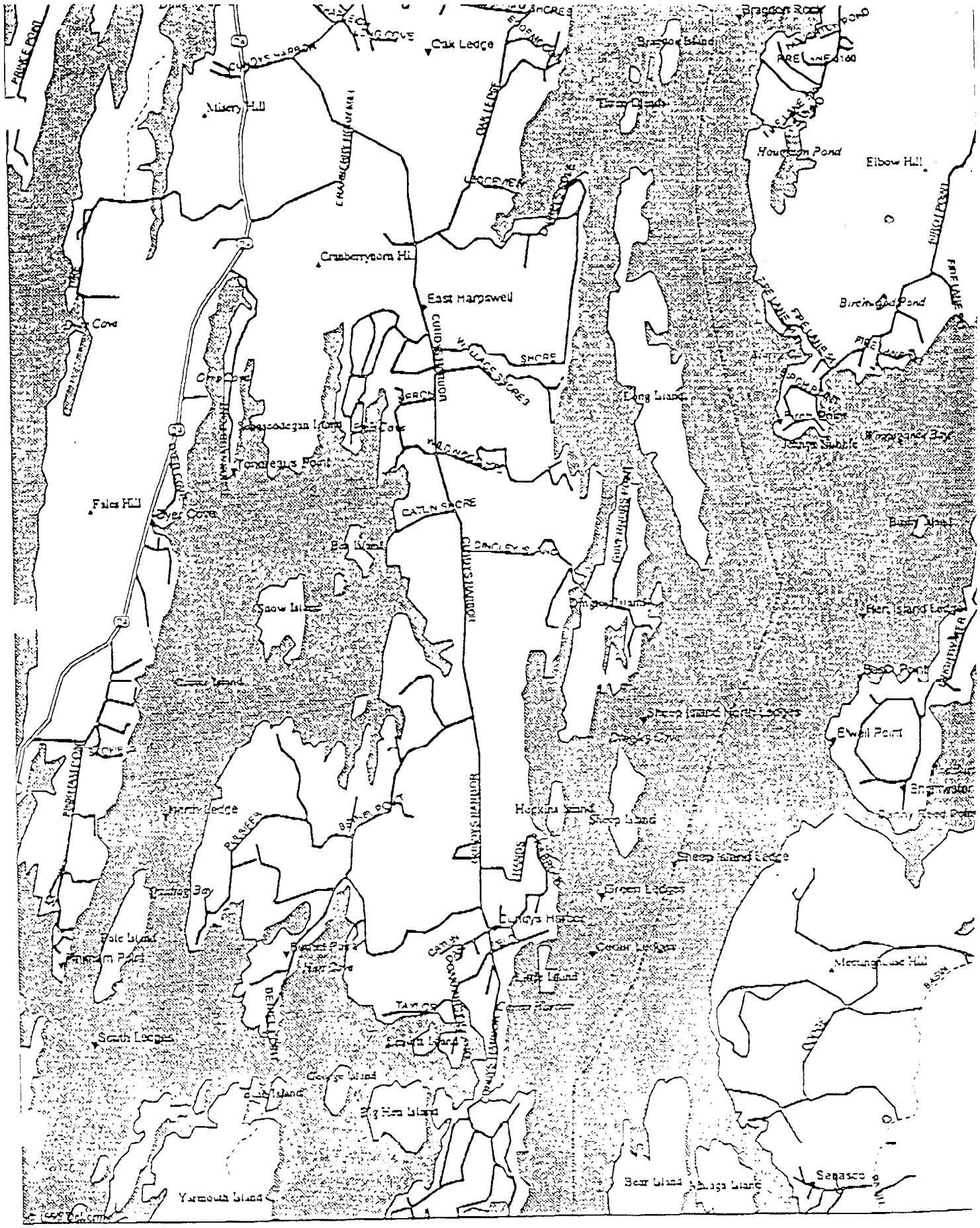
Oak Ledge
Misery Hill
Cranberryhorn Hill
East Harpswell
Houghton Pond
Elbow Hill
Birchwood Pond
Long Island
Tondreaus Point
Fales Hill
Dyer Cove
Snow Island
Sheep Island North Ledges
Elwell Point
Hopkins Island
Sheep Island
Sheep Island Ledge
Green Ledges
Cundys Harbor
Cedar Ledges
Pole Island
South Ledges
Big Hen Island
Yarmouth Island
Bear Island
Senasco
Mectinghouse Hill

Department of Marine Resources
Southern Maine Regional Office
HC 63 Box 252, Bath, Maine 04530
Tel. (207)443-6559 FAX(207)386-0025

July 29, 1996

Elsa Martz
12 Lower Spruce Shore Road
Cundy's Harbor
Brunswick, ME 04011

Re: The effects on the clam flats of opening up the causeway to Dingley Island .

Dear Ms. Martz.

Opening the causeway by placing a culvert or bridge should result in an increased current flow over the clam flats as the causeway now blocks along shore current flow between the mainland and the island. Current flow affects a number of parameters important to clam survival and growth including food import, sediment composition, temperature, and dissolved oxygen. In general, increased current flow improves these parameters for soft-shell clams.

After visiting the site of the causeway and observing the clam flats adjacent to it, I am of the opinion that the sediment composition nearest the causeway is less than ideal for soft-shell clams due to the high level of fine sediments. Clams prefer coarser sediment for settlement and fine sediment can interfere with feeding. The fine sediments have probably been accumulating ever since the causeway was established and will continue to do so increasing the area inhospitable to clams. An increase of current flow with an opening in the causeway will remove some of the finer sediments improving its composition.

I discussed the proposal to open the causeway to Dingley Island with the Harpswell Shellfish Committee and they agreed that the clam resource would benefit from such a project.

Sincerely,

Don Card

Donald J Card
Regional Biologist

cc: Ron Joseph
David Etnier

What is CON/SPAN?

CON/SPAN is a patented modular precast system for total set-in-place construction of bridges, culverts, underground structures and environmentally acceptable alternatives for underground containment.

- Each installation is custom designed and manufactured for your specific site requirements.
- Precast modular units are delivered to your site and set in place by crane.
- Backfilling can begin immediately.
- CON/SPAN is available from a national network of precast producers.

CON/SPAN's fully engineered system stands apart from other products through the strength of its distinctive arch action and extensive technical support.

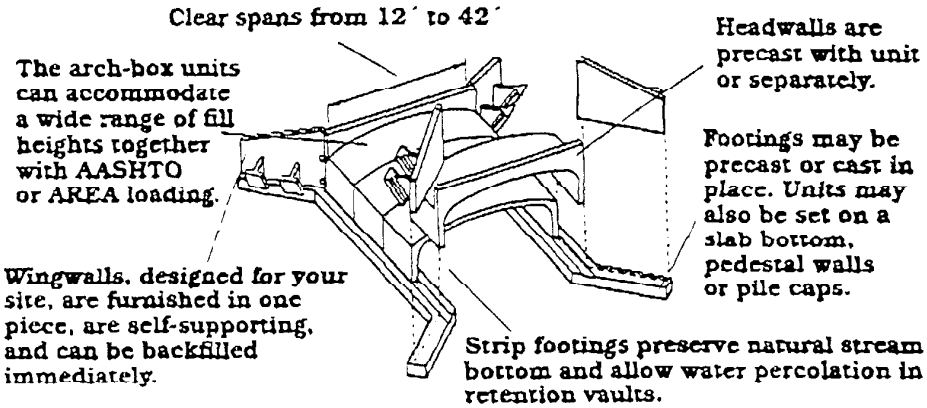

- **Separate or integral closed ends are used for underground containment vaults.**
- **Variable modular configurations allow for practically unlimited lengths, widths and vertical clearances.**

How the CON/SPAN staff works for you

- One call to **800-526-3999** connects you with our design team of experienced professional engineers.
- We help owners, consultants and contractors evaluate CON/SPAN solutions for specific projects.
- We work with your local CON/SPAN network supplier to give you accurate pricing.
- We provide comprehensive design support and design aids for automated and manual plan preparation, and assistance through all phases from concept through installation.

How CON/SPAN saves you time and money

- The arch shape provides an economy of materials for a lower initial cost.
- Overall savings for a project is significant over cast-in-place.
- Fast installation—usually in hours. Road closings and detours are minimized, resulting in significant reductions in maintenance of traffic costs. A Maine DOT project study estimated a seven-month savings of construction time over cast-in-place construction.
- Eliminates two major bridge problems—costly maintenance of an exposed bridge deck and bridge deck icing.
- Off-site fabrication ensures tight adherence to specs, less on-site work and quality control of modular units.
- Long life cycle, low life cycle costs, virtually no maintenance.

Appendix B

Finding of No Significant Impact (FONSI)

[To be inserted]